NATIONAL ENTERPRISES

www.nationalenterprises.org
+91- 9718-38-3333
info@nationalenterprises.org

BLAST CLEANING & FINISHING SYSTEM

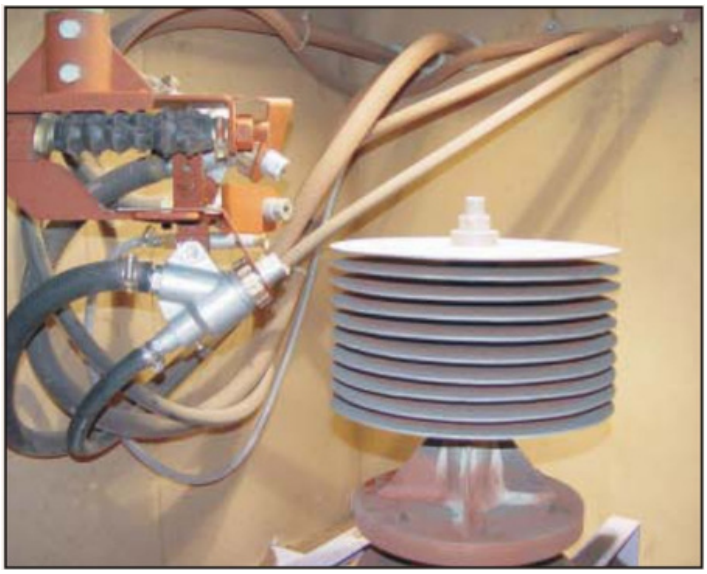

Abrasive Blasting as a finishing process has been successfully utilised on metal, glass , ceramics, plastic and stone. Purpose includes deburring, descaling, peening, polishing, stress relieving, deflashing & cleaning.

ABRASIVE BLAST CLEANING & FINISHING CABINETS

BEFORE & AFTER BLASTING SAMPLES

FARIDABAD • PUNE • JODHPUR • LUDHIANA
CHENNAI • BANGALORE • AHMEDABAD • KOLKATA

NATIONAL ENTERPRISES

www.nationalenterprises.org
+91- 9718-38-3333
info@nationalenterprises.org

ABOUT ABRSIVE BLASTING

THE PROCESS

It entails forceful direction of abrasive particles-dry or suspended in a liquid-against the surface of a metal part or product, to remove contaminants or to impart a desired finish. The process is also called sand blasting, grit blasting, shot blasting, liquid honing, etc.

Abrasives used

Iron grit, Steel shot, Aluminium oxide, Glass beads, Walnut shell, and Plastic grit are used as blasting media. The type of surface, contamination to be removed, finish required, and required production all influence the choice.

Nature of Finish obtained

It is most important to recognise that blasting always produces a "non-directional" (isotropic) matte surface as opposed to a directional surface imparted by conventional polishing methods utilizing wheels or belts. Blasted surfaces are never highly light reflective, but are of satin, matte and non glaring. Still there is no relationship betweenIt is most important to recognise that reflectivity and smoothness. A dl appearing blasting always produces a "non directional" blasted finish can be smoother than a bright (isotropic) matte surface as opposed to a or polished finish, directional surface imparted by conventional polishing methods utilizing wheels or belts. Blasted surfaces are never highly light reflective, but are of satin, matte and non glaring. Still there is no relationship between reflectivity and smoothness. A dl appearing blasted finish can be smoother than a bright or polished finish.

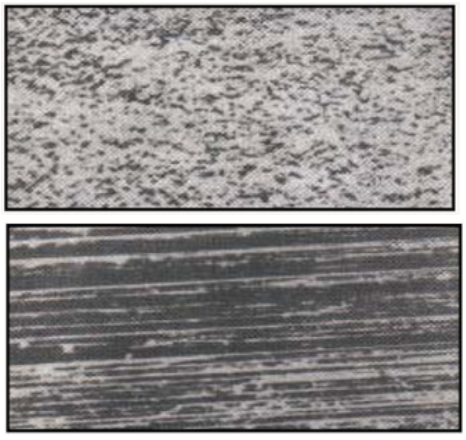

100 magnification micro photograph shows the blasted surface (top) as opposed to the polished surface (bottom).

What is a Blasting Cabinet?

A Blast Cabinet is an enclosure which houses the abrasive propelling mechanism (blat gun), holds work in position, and confines flying abrasive particles and dust.

METHODS OF ABRASIVE BLASTING

What are Super Blaster (SB), Pressure Blaster (PB) and Wet Blaster (WB) machines?

There are basically three established methods of abrasive blasting, i.e., INDUCTION-SUCTION (SUPPER BLASTER), DIRECTOR PRESSURE (PRESSURE BLASTER), and SLURRY PUMPING (WET BLASTER). These are briefly described below:

INDUCTION - SUCTION

In this method, abrasive is drawn from the hopper into the blast gun by a partial vacuum created by high velocity airflow. This is useful for light abrasive and deaning of light corrosion.

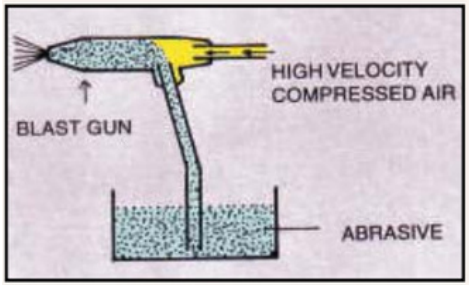

Direct Pressure

Used for cleaning delicate surfaces and deflashing of plastic parts. It is cheap and economical in use.

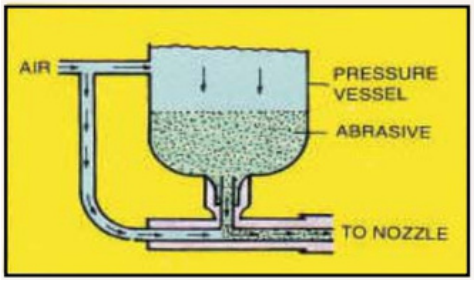

Slurry Pumping

In this method, a pump draws fine abrasive mixed in water (slurry) from the bottom of the hopper and forces it to the blast gun where compressed air is introduced to atomise the slurry. Slurry is impacted on the surface to be cleaned.

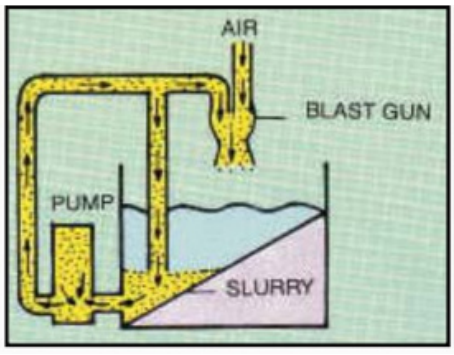

Selection Of Abrasives

In a blasting operation, the abrasive used will substantially affect the result and cost of your operation. We offer all types of abrasives and dependable advice for the right selection to obtain the best results at a low cost. Some of the abrasives are:

Aluminium Oxide

Brown & While types, low breakdown rate & highly effective cutting action. suitable to treat castings, metals, and where discolorations are to be avoided.

Glass Beads

Unique abrasive for cleaning, finishing, and shot peening. It is chemically inert, good for shot peening and for glaring/shine finish. It does not abrade the surface and keeps job tolerances intact.

Iron Grit & Shot

Iiron angular grit and round shots are used extensively for the removal of heavy scale and rust. It is a low-cost abrasive with the lowest breakdown rate. Suitable for surface preparation before re-coating or painting.

Walnut Shell

Used for cleaning delicate surfaces and deflashing of plastic parts. It is cheap and economical in use.

Plastic Grit

Plastic granular parties, particularly acrylic and urea, are most suitable for stripping surface coatings while maintaining substrate integrity and dimensional tolerances intact.

All abrasives are available in coarse, medium & fine grades to suit your particular application.

Type	Mesh	mm Size
Chilled Iron Grit/Shot		
Coarse	12-18	1.40-0.85
Medium	18-52	0.85-0.30
Fine	52-85	0.30-0.18
Glass Beads		
Coarse	18-36	0.85-0.42
Medium	36-60	0.42-0.25
Fine	72-150	0.21-0.10
Aluminium Oxide		
Coarse	12-18	1.40-0.85
Medium	18-85	0.85-0.18
Fine	85-220	0.18-0.07
Silicon Carbide		
Coarse	12-18	1.40-0.85
Medium	18-85	0.85-0.18
Fine	85-220	0.18-0.07
Walnut Shell		
Medium	18-30	0.85-0.50
Plastic Grit		
Acrylic	18-30	0.85-0.50
Urea	18-30	0.85-.050

CORPORATE OFFICE: 12/2 Main Road, Opp. Lumax Automotive Systems Ltd.,Nr. Sec-37 modh, Faridabad-121003, Haryana, India.

NATIONAL ENTERPRISES

www.nationalenterprises.org
+91- 9718-38-3333
info@nationalenterprises.org

KEY FEATURES OF BLAST CABINETS

All cabinet models are rubber lined inside (except SB models) as standard practice.

A large viewing window Vision glass is protected by a wire screen against abrasion, and glass is easily replaceable.

Easy fitting of accessories like nozzles, hoses, etc. whenever required on site.

The new ergonomic cabinet is designed to make the operator relax while working.

Blasting start/stop is through a foot valve so that both hands of the operator are free to manoeuvre the job or blasting nozzle.

An air pressure gauge, air pressure regulator, moisture separator (except for Wet Blaster-WB), and an air gun are provided as standard fittings.

Continuous clog-free abrasive feed is assured through the mixing tube. Any standard abrasive of suitable size can be used.

Simple operation and simple installation as the machines are ready to operate when connected with the airline and electric supply. A foundation or pit for installation is not necessary (except for PB models).

Constructed from heavy gauge mild steel, folded and welded It incorporates sealed hand holes and gasketed doors to ensure that dust will not escape from inside.

It is environmentally clean and friendly as a dust collection device is attached, so only clean air is discharged to the atmosphere.

The noise level of the fan is kept below 80 BA at the operator's position. Proper ventilation is provided for clear visibility while blasting.

Doors are provided with a Cam Lock System, which seals the door across the width by operating a single lever, and are easy to open and close.

High lumens for good illumination and proper ventilation for clear visibility while blasting.

The new wear plate at the cyclone's inlet(in SB) increases its life, even when using highly abradable media like aluminium oxide.

A flexible pneumatic hose has been used for air and abrasive to reduce the operator's fatigue and has a long service life.

The vibrator body is gravity cast, with a high carbon hardened ball and sleeves for a long service life.

SUPER BLASTER - SB

Works on **INDUCTION-SUCTION** principle of abrasive delivery. The super blaster ensures continuous working and no interruption in blasting cycle. Recommended for light and medium size components where surface is to be cleaned or deburred or to impart with fine matte finish. Useful for heat treatment shops, tool, die and mould makers and shot peening of light metal components etc. SB machines are incorporated with reclaimer which ensures uniform cleaning and finishing each time and in every next operation. This is achieved by an automatic system of abrasive cleaning and separation built into the reclaimer. Dust and debris are separated and only clean and sized abrasives are carried to blast gun-ensuring a homogeneous finishing. Most cabinets of other make do not have the reclaimer as standard practice.

Options available on request

Rubber lining inside walls of cabinet.
Reversejet cartridge filter dust collector.
Higher output Blast Gun in place of standard.
Foot operated treadle switch for blasting ON/OFF.
Fitted with optional accessories.

MANUFACTURING UNIT: Plot no. 2, Gali No. 1, Khasra No. 7, Behind Rajesh Dharam Kanta, Village Bajri, Dabua Pali Road, Faridabad 121004, Haryana, India.

NATIONAL ENTERPRISES

www.nationalenterprises.org
+91- 9718-38-3333
info@nationalenterprises.org

PRESSURE BLASTER - PB

Works on **DIRECT PRESSURE** principle of blasting, the pressure blaster produces high abrasive velocity resulting to cleaning of job at faster rate. A pressure vessel directly bolted below hopper of cabinet has automatic abrasive refilling arrangement. A tubular fabric bag type dust collector with generous filter area is attached with cabinet as standard feature for high efficiency of dust collection. A manual shaker is also provided for bag shaking. PB is recommended for fast cleaning, for removal of heavy rust and corrsion using coarse abrasive, it is most suitable for etching the surface needed for rubber-lining, FRP lining and metal spaying. Castings and forgings are cleaned speedily. Blast pressure can be controlled from 30 to 90 psig. Almost all types of coarse and medium size abrasives can be used depending upon application.

Options available on request

- Motorised bag shaking arrangement.
- Reversejet cartridge filter dust collector.
- Higher output Blast Gun in place of standard.
- Foot operated treadle switch for blasting ON/OFF.
- Fitted with optional accessories.

WET BLASTER - WB

Works on **INDUCTION-SUCTION** principle of blasting. The most important point in wet blasting is its ability to use very fine abrasive - as fine as 5 microns. Fine abrasive particles are suspended in liquid, usually water and then pumped to a nozzle as a slurry. At nozzle, the slurry is introduced into air-stream and propelled against job. The glandless slurry pump is used to feed the slurry at positive pressure into blast gun. The wetted parts of pump are of thermoset plastic material for corrosion resistance. WB machine is useful in tool room to remove feather burrs from multitooth cutting tools, such as, milling cutters, holes, broaches and taps eliminating hours of handhoning time. It deburrs intersecting holes in precision parts which are inaccessible by any other method. The finest machined surface can be super-finished without damage to sharp edges and exact tolerances.

Options available on request

- Higher capacity slurry pump for high output.
- Higher output Blast Gun in place of standard
- Foot operated treadle switch for blasting ON/OFF.
- Fitted with optional accessories.

AIR REQUIREMENT CHART

	Air Consumption in Cub.M / min. (Cub.ft./min.)	Air Consumption in Cub.M / min. (Cub.ft./min.) 4.92 (70)	5.63 (80)	6.33 (90)
Air orifice Size	Nozzle size 5 mm (PB)	0.93 (33)	1.08 (38)	1.16 (41)
	6 mm (PB)	1.73 (61)	1.93 (68)	2.10 (74)
	2 mm (SB, WB)	0.40 (14)	0.45 (16)	0.54 (19)
	3 mm	0.54 (19)	0.59 (21)	0.68 (24)
	4 mm	0.85 (30)	0.96 (34)	1.05 (37)
	5.5 mm	1.67 (59)	1.87 (66)	2.07 (73)

We suggest air compressor to be of 20% excess capacity.

PUNE REGIONAL OFFICE: Survey No. 24, Near Shree Tagore School, Shed No. 9, Indrayani Nagar, Bhosari Pune Maharashtra 411026.

NATIONAL ENTERPRISES

www.nationalenterprises.org
+91- 9718-38-3333
info@nationalenterprises.org

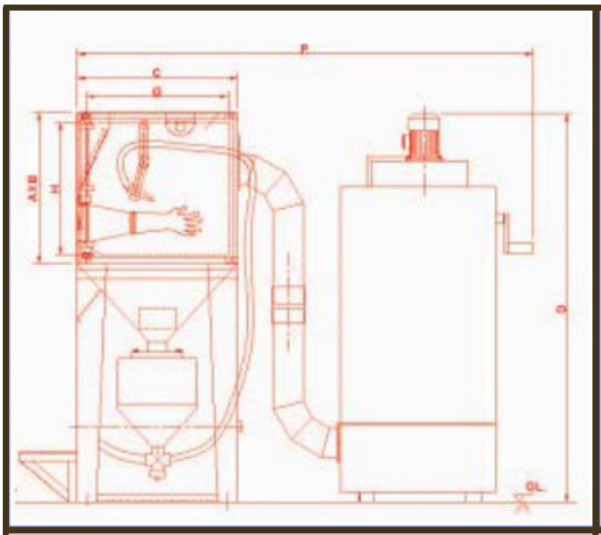

PRESSURE BLASTER (PB)

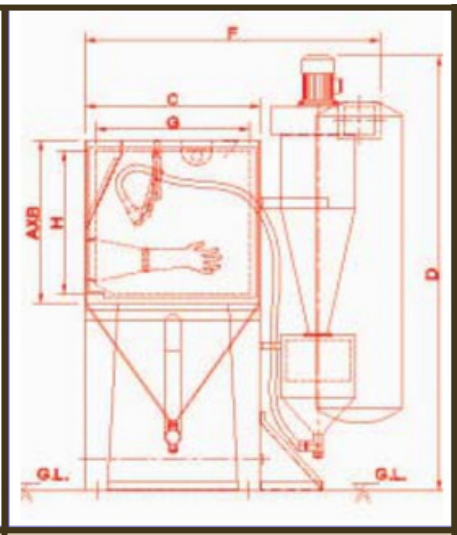

SUPER/ SUCTION BLASTER (SB)

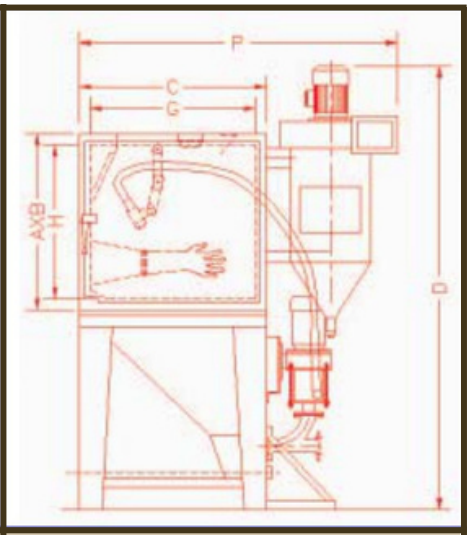

WET BLASTER (WB)

TECHNICAL SPECIFICATIONS

	PRESSURE BLASTER (PB)			SUPER BLASTER (SB)			WET BLASTER (WB)	
MODEL	PB-9182	PB-12090	PB-150120	SB-6060	SB-9182	SB-12090	WB-9182	WB-12090
Working Chamber mm								
Height A	775	900	900	600	775	900	775	900
Width B	910	1200	1500	600	910	1200	900	1200
Depth C	820	900	1200	600	820	900	820	900
Door Opening mm								
Width G	730	800	1100	500	730	800	730	800
Height H	675	800	800	500	675	800	675	800
Overall Dimension mm								
Height D	2130	2030	2080	1660	2120	2570	1940	2235
Width	1100	1365	1665	800	1070	1365	1070	1365
Depth P	2500	2430	2730	1500	1400	1700	1500	1700
Dust or Mist Collector or								
Reclaimer Fan Motor HP	1.0	1.0	1.5	0.5	1.0	1.5	0.5	1.0
Fan Capacity (M^3/min)	14.16	14.16	22.66	5.66	11.32	16.98	5.66	11.32
Fan Capacity (CFM)	500	500	800	200	400	600	200	400
Filter Cloth Area (M^2)	7.5	7.5	10.0	1.0	2.0	4.0	---	---
Slurry Pump Motor (HP)	---	---	---	---	---	---	1.0	1.0
Airjet Orifice mm	---	---	---	*2,3	*3,4,5.5	3,*4,5.5	*3,4,5.5	*3,4,5.5
Blast Nozzle mm	*5,6	*5,6	*5,6	*6,8	*8,10,12	8,*10,12	*8,10,12	*8,10,12
Abrasive Storage Capacity Litres (CFT)	28(1.0)	42(1.5)	42(1.5)	28(1.0)	28(1.0)	42(1.5)	42(1.5)	42(1.5)
Pit Size mm								
Width	---	600	900	---	---	---	---	---
Length		2180	2530					
Depth		510	600					
Weight in Kg (appro.)	580	650	760	250	380	490	400	525
Abrasive Feed	Direct Pressure			Induction Suction			Glandless Pump	

FARIDABAD ● ● ● ● ● PUNE ● ● ● ● ● JODHPUR ● ● ● ● ● LUDHIANA
CHENNAI ● ● ● ● ● BANGALORE ● ● ● ● ● AHMEDABAD ● ● ● ● ● KOLKATA